W940 Rated Capacity Indicator
Operating and Installation Manual
(Preliminary)

(Version OPW940 V2.0)

Crane Warning Systems Atlanta

1-877-672-2951 Toll Free

1-678-261-1438 Fax

www.craneindicators.com

sales@craneindicators.com

1. Introduction

The W940 Rated Capacity Indicator is an electronic system intended as a guide to the operator so that loads can be handled safety within the stability of the machine.

The system gives visual and audible warnings of the condition of loading of the machine as follows:-

1. Visual percentage of Forward Moment currently being handled – colored bar graph. (8 light emitting diodes providing indication of 0% to 100% Forward Moment).

2. Visual and Audible Warning of «Approach to Overload» condition – Amber «Approach» lamp and pulsing Audible Warning device (Horn).

3. Visual and Audible Warning «Overload» condition – Red «Overload» lamp and continuous Audible Warning device (Horn).

The system elements are: -

1. Two Pressure Sensor – mounted in the main lifting cylinder Hydraulics.

2. Display Unit – located in front of the operators position.

3. A control Unit containing the system amplifier and Electrical Interconnections facilities.

For Installations where there are two operating positions(eg at the vehicles offside and kerbside locations), a second identical display unit can be added to any system.

A Relay (motion cut) facility operating in the «OVERLOAD» condition is also available fitted option.

2. Hardware Description

2.1 Pressure Sensor

Increased boom loading produces an increase in pressure in the main lifting ram. The increase in pressure is measured by the head side pressure sensor, the resulting electrical signals pass via a small diameter multicore cable, to the chassis mounted Control Unit. A second sensor is used on the rod side to compensate for affects during boom movement.

2.2 Control Unit

The control unit houses all of the circuits necessary to condition the sensor signals, power the display unit circuits. The unit is also fitted with an audible alarm to provide warning of Overload conditions to the operator. Electrical supply to the indicator is made via a 2-core cable from a suitable point within the electrical system of the vehicle. The system is designed to operate from a nominal 12 vdc vehicle supply. A 24 Vdc version is also available.

The indicator has no ON/OFF power switch and should be arranged to switch «ON» via the vehicle P.T.O. switch

Calibration adjustments (referred within this manual as «ZERO» and «GAIN» presets) are provided within this unit. These presets only require adjustment during system calibration (see Section 5 Calibration) and therefore should not be adjusted during normal operation of the vehicle. See Drawing DVE940-1 for position of presets.

A 1 ampere rated fuse is fitted within the Control Unit

2.3 Display Unit

The display has only one operator control namely the «TEST» push button which enables the indicator visual and alarm features to be checked on a regular basis.

3.0 OPERATOR INSTRUCTION

3.1 Indicator Use

The illuminating scale on the display gives an indication of the status of the current lift compared with the capacity of the machine. The scale consists of a series of light emitting diodes (LED). Starting from the left , more LED's illuminate as the lift gets closer to the capacity of the machine. The scale is divided into three colored zones.

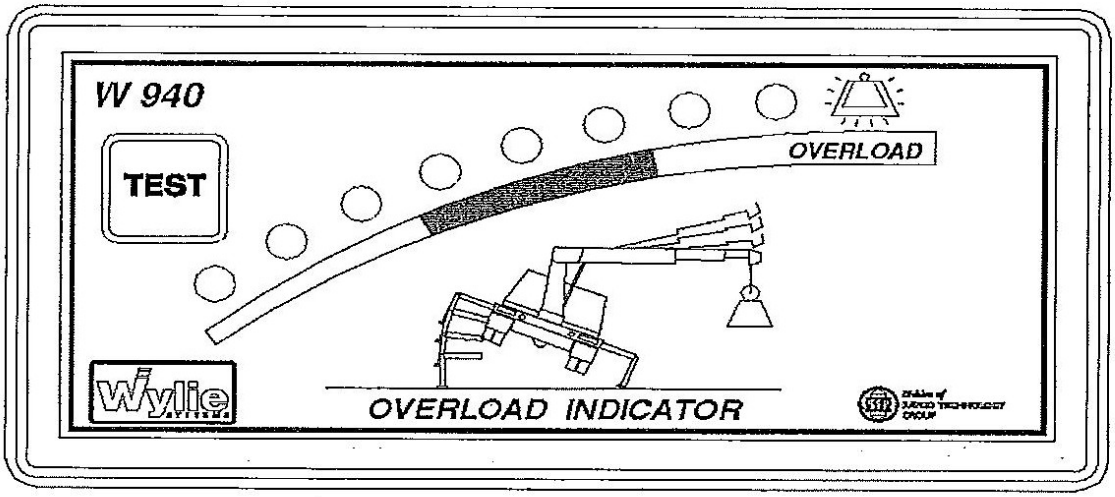

W940 Display Unit

The green zone (3 off LEDs) indicate a lift within capacity.

The amber zone (3 off LEDs) indicates a lift within capacity but caution is necessary. When the second Amber LED illuminates then the audible alarm within the Control Unit pulses.

The red zone (2 off LED) indicates that the capacity of the machine is exceeding, ie « OVERLOAD». When the first red LED is illuminated, then the audible alarm within the Control Unit pulses. When the second red LED illuminates the audible alarm within the control Unit sounds continuously, and lockout system is activated if fitted.

Although a certain level of electronic damping has been incorporated into the system, when machine loading is close to the maximum permitted load, the «OVERLOAD» alarm may operate momentarily with either sudden boom movements or during vehicle movement over uneven terrain.

3.2 Indicator «ZERO» check

On a regular basis (once a week, recommended), the operator should carry out the following check:-

1) Move the machine to a flat and level ground site and move the empty lifting hook to a position of minimum operating radius. You must raise the boom to this position.

2) With the boom held at this position check that the display shows zero forward movement, ie. Only the 1st green LED illuminated. (Note: In some instances the 1st green LED may fluctuate On and OFF, or remain OFF continuously, but this is not a fault). If above check proves okay then depress «TEST» push button and check the visual and audible alarm operation. If this checks out okay then unit is safe to use.

3) If more than one green LED is illuminated with the empty hook at minimum operating radius or the overload audible buzzer is activated with no LEDs illuminated, then the system requires checking for cable breakages or the other faults.

4.0 INSTALLATION

4.1 Pressure Sensors

It is beyond the scope of this manual to identify the pressure unions and additional pipework required for the differing types available, these requirements should have been finalised prior to placement of order.

One pressure sensor must be installed into the head side and the order into the rod side of the main lift cylinder hydraulics. To ensure that the indicator remains active and accurate at all times, it is important to connect to the cylinder valves if fitted.

DO NOT USE FLEXIBLE HOSE AS FEED PIPE TO THE SENSOR

Ensure that the pressure sensors are not mounted in a position where it will suffer from mechanical movement during normal boom operation.

The pressure sensor will normally be attached to a «T» piece in the hydraulic line. The sensor are single ended with the electrical connection being made at the opposite end to the hydraulic connection.

Ensure that all joints and connections to the vehicles hydraulics are leak free before repressurising the system.

During subsequent cable routing through to the control unit location ensure that the sensor cable is supported/tie wrapped at reasonable intervals, that no unnecessary strain is applied to the cable and that a minimum bend radius of 25 mm is retained.

4.2 Display Unit

The display Unit is mounted in front of the operators position. It should be positioned so that the Bar Graph lamps are in direct line of sight. Connect the system in accordance with Wylie Systems Drawing DVE940-1. During cable routing ensure that the cable is supported/tie wrapped at convenient locations, so that no unnecessary strain is applied to the cable and that a minimum bend radius of 25mm is retained.

4.3 Control Unit

Mount the Control Unit using the mounting brackets supplied with the main body in a vertical orientation (audible alarm on underside, cable glands on vertical side) in a position where the assembly is:-

a) Within reach of the fixed lead lengths on the display (4 m) and the pressure sensor (3 m)

b) The operator can hear the audible alarm whilst lifting takes place.

5.0 CALIBRATION

Refer to drawing DVE940-1 for the electrical connection details.

Calibration of the system is conducted with certified weights and is accomplished from the operator driving position using a small screwdriver. The controls are accessible within the Control Unit once the cover is removed.

DO NOT adjust «GAIN» presets. These are factory set.

«ZERO» preset. Counterclockwise motion decreases the zero offset sensor. Clockwise motion increases the zero offset sensor.

«TRIP LEVEL» preset. Counterclockwise motion decreases the indicated machine loading (% Forward moment); Clockwise motion increase the indicated machine loading (%Forward Moment).

Note that there is a «ZERO» preset for both «HEAD SIDE» and «ROD SIDE». The «RODE ZERO» is factory set, changing this setting must be done by qualified people.

«DIVIDE» preset. Clockwise motion increase the amount of compensation during boom movement.

«CHECK» position refers to the machine being on flat level ground with the empty lifting hook positioned at minimum operating radius. The boom should have been raised to this position which should have been the last operation.

The following CALIBRATION procedure should be redone after replacement of a system component (ie a new pressure sensor or a new Control Unit is fitted) or following failure of the system to respond correctly to the «ZERO» Check Routine (paragraph 3.2).

Calibration Procedure:-

Step 1: «HEAD SIDE» ZERO

Set the vehicle at «CHECK» position (see above). Slowly adjusting the ZERO HEAD preset, until the first GREEN lamp just extinguishes.

Step 2: «TRIP LEVEL»

With SWL on the hook and positioned at maximum radius and boom horizontal (setting position), the last boom movement should be raise this position before attempting setting in order to zeroed the Rod pressure. Adjust the appropriate «TRIP LEVEL» preset (Default 3), until the final red «OVERLOAD» just illuminates and the audible alarm is sounding continuously.

Step 3: «Check Settings»

Recheck ZERO as in Step 1. Adjust as necessary.
Recheck «TRIP LEVEL» as in step 2. Adjust as necessary.
It could be necessary to redone this step a couple time.

Step 4: Set Compensation

With SWL on the hook at the step 2 position raise the boom from 20 to 30 degrees and then boom down slowly to the setting position. It will be observed that the alarm will be triggered before the setting position is reached. To compensate for this effect , use the DIVIDER preset. Turning it counterclockwise will reduce this effect (factory setting is fully clockwise, at least 10 turns will probably be required from the factory setting)

Step 5: «System Check»

Using great care, check the indicator performance at a number of different radius points with the associated SWL suspended from the hook to ensure that «OVERLOAD» alarm is not initiated too late at any point (note 1).

Note 1)
In the event that a particular SWL and radius combination causes a late OVERLOAD alarm to be indicated then it will be necessary to repeat STEP 2 at this revised SWL/Radius position. Compensation will not require resetting.

More lifting duties can be calibrated by repeating steps 2 through 3 above whilst an external switch (duty selection) is linked across Control Unit terminals SW1, SW2 and SW3 as indicated on drawing DVE940-1. When used other «TRIP LEVEL» presets become active and can be used for alternate setting. Only one compensation setting is available for all duties. as indicated on drawing DVE940-1. When used other «TRIP LEVEL» presets become active and can be used for alternate setting. Only one compensation setting is available for all duties.

6.0 MAINTENANCE AND FAULT DIAGNOSTIC

6.1 Maintenance

There are no moving parts to the system and routine maintenance is therefore restricted to ensuring that all pressure joints are sealed and all electrical cables remain in good condition.

6.2 General Fault Diagnostic

Before carrying out any instrument tests on the system, check the fuse and replace if defective.

Most problems arise from snagged cable connections between the individual system assemblies. All electrical connections and interconnection leads should be checked regularly for physical damage and repaired or replaced as found necessary.

If an electrical connection is broken to or from the pressure sensor or if the sensor becomes faulty, an «Out of Range» display condition is likely to result. In this condition the system will respond by producing a continuous audible alarm with all the LEDs either illuminated (offscale = ve) or all extinguished (offscale –ve).

The sensor and it connections loom can be checked for possible internal malfunction by detaching the 4 off connections on terminals T3 to T10 inclusive and conducting the following checks:

a) Measure the resistance between any combination of individual leads from pressure sensor . The resistance measured should between 200 and 400 Ohms.

b) Measure the resistance between any individual lead from the pressure sensor and the body of the of the pressure sensor. The resistance measured should be above 20 Megohms.

If the resistance measured are outside the tolerances given, a faulty pressure sensor/cable loom is indicated and this should be replaced immediately.

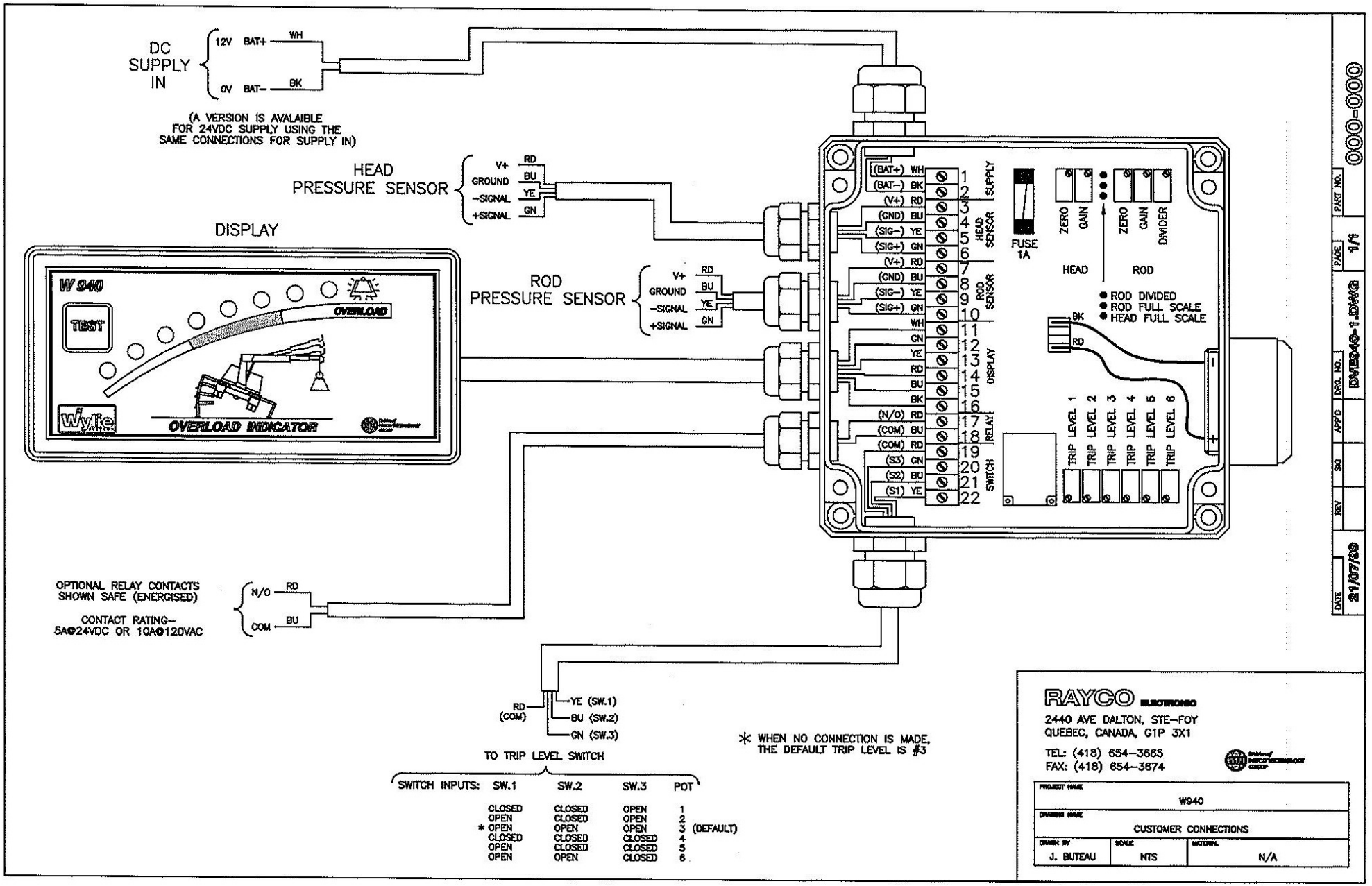

SWITCH INPUTS:	SW.1	SW.2	SW.3	POT	
	CLOSED	CLOSED	OPEN	1	
	OPEN	CLOSED	OPEN	2	
*	OPEN	OPEN	OPEN	3	(DEFAULT)
	CLOSED	CLOSED	CLOSED	4	
	OPEN	CLOSED	CLOSED	5	
	OPEN	OPEN	CLOSED	6	

RAYCO ELECTRONICS
2440 AVE DALTON, STE-FOY
QUEBEC, CANADA, G1P 3X1
TEL: (418) 654-3665
FAX: (418) 654-3674

PROJECT NAME: W940		
DRAWING NAME: CUSTOMER CONNECTIONS		
DRAWN BY: J. BUTEAU	SCALE: NTS	MATERIAL: N/A

DATE	REV	SIG	APP'D	DRG. NO.	PAGE	PART NO.
21/07/99				DWE940-1.DWG	1/1	000-000

without bracket (for dashboard)

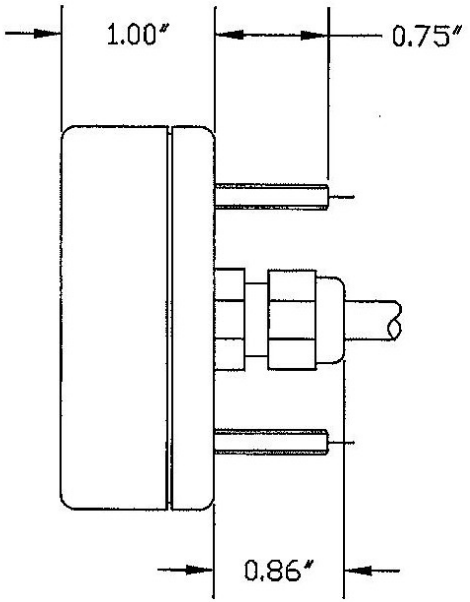

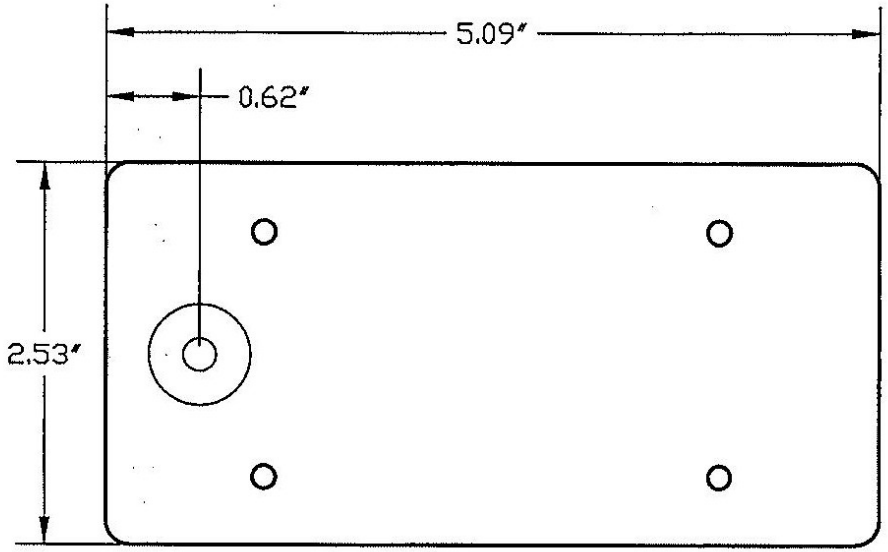

RAYCO ELECTRONIC
2440 AVE DALTON, STE-FOY
QUEBEC, CANADA, G1P 3X1
TEL: (418) 654-3685
FAX: (418) 654-3674

DRAWN BY	SCALE	PROJECT NAME				DRAWING NAME	
F. MÉTAYER	NTS	W 940				W 940 INSTALLATION	
MATERIAL	DATE	REV	SIG	APP'D	DRG. NO.	PAGE	PART NO.
N/A	21/07/99				DVU940-1.DWG	1/2	000-000

bracket (optional)

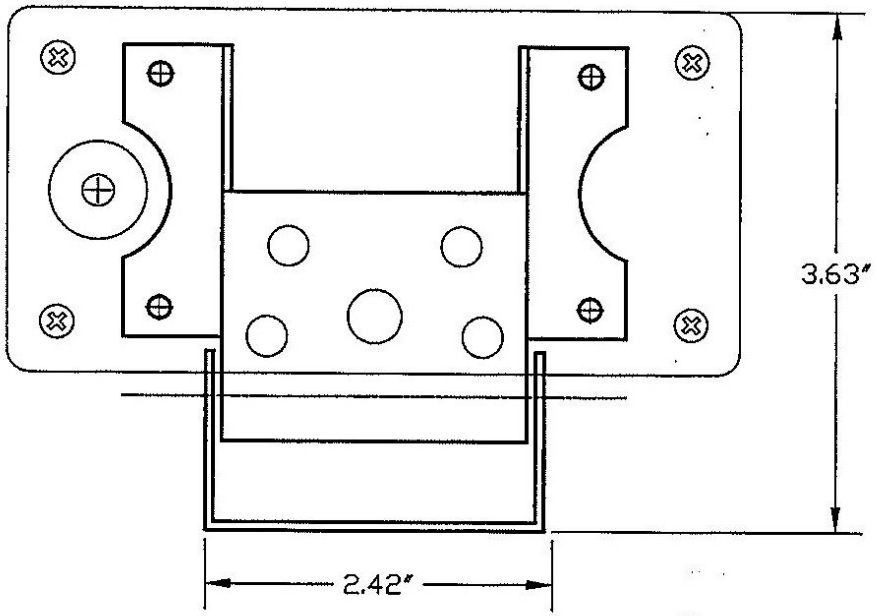

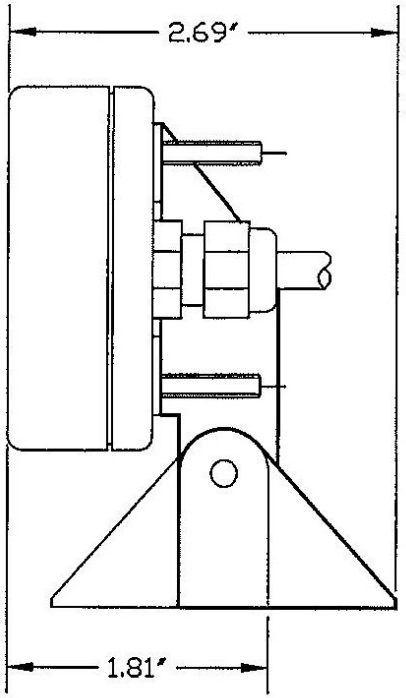

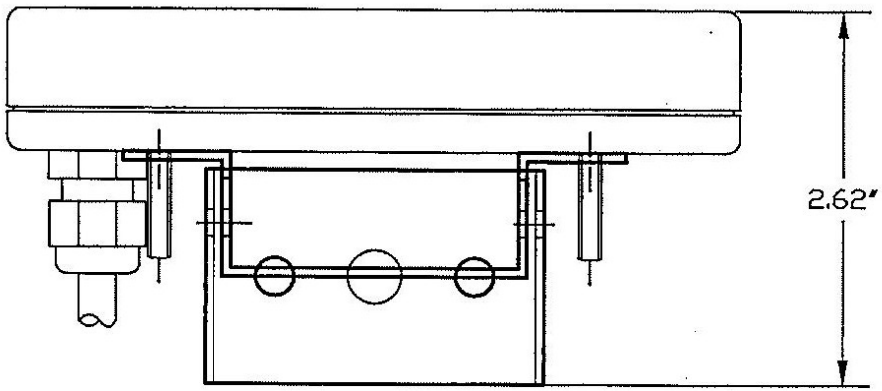

RAYCO ELECTRONIC
2440 AVE DALTON, STE-FOY
QUEBEC, CANADA, G1P 3X1
TEL: (418) 654-3665
FAX: (418) 654-3674

DRAWN BY	SCALE	PROJECT NAME				DRAWING NAME		
F. MÉTAYER	NTS	W 940				W 940 INSTALLATION		
MATERIAL	DATE	REV	SIG	APP'D	DRG. NO.	PAGE	PART NO.	
N/A	21/07/99				DVU940-1.DWG	2/2	000-000	